hadrian®

Stainless Steel - Headrail Braced
ELITE PLUS SERIES
Metal Toilet Partitions

Material Specification

1.01 Construction

Doors, Panels and Pilasters shall be constructed of two sheets of panel flatness type 304, #4 brushed finish stainless steel, laminated under pressure to a "Verticel" (1/2") honeycomb core for impact resistance, rigidity and sound deadening. Formed edges to be welded together and interlocked, under tension, with a roll-formed oval crown stainless steel locking bar, mitred, welded and ground smooth at the corners. Honeycomb to be of virgin, long fiber paper with a maximum 12.5mm (1/2") cell size.

1.02 Doors

Shall be 1816mm (71.5") high and 25mm (1") thick with cover sheets not less than 0.8mm (.030").

1.03 Panels

Shall be 1918mm (75.5") high and 25mm (1") thick with cover sheets not less than 0.8mm (.030").

1.04 Pilasters

Shall be 32mm (1.25") thick with cover sheets not less than 0.9mm (.036").

1.05 Headrail

Shall be 25mm (1") by 41mm (1.625") extruded anodized aluminum with anti-grip design. Wall thickness to be 1.5mm (.060") and shall be securely attached to wall and pilasters with manufacturer's fittings in such a way as to make a strong and rigid installation. All joints in headrails shall be made at a pilaster.

1.06 Pilaster Fastening Method

Pilasters shall be securely and rigidly fastened to the floor and fitted with a jack levelling screw for vertical adjustment. The floor fastening shall be concealed and protected by a 102mm (4") high, die-formed stainless steel pilaster shoe.

1.07 Hardware & Fittings

All panel and pilaster brackets and all door hardware shall be chrome plated zinc die castings, standard. Fasteners are 14 x 1-3/4" and 14 x 5/8" TR-27 6-lobe security screws. Doors shall be equipped with a gravity type hinge mounted on the lower pilaster hinge bracket. Door hinges shall be the wrap around type and adjustable to permit the door to come to rest at any position when not latched. Each door to be fitted with a combined coat hook and bumper and a concealed latch, with face mortised flush with edge strip of door. A full height continuous stop and hinge side filler eliminate all sightline gaps between pilasters and doors. Threaded door top hinge pin shall have a metal core and self lubricating nylon sleeve to ensure smooth, quiet operation. Pilaster shoes shall be a welded one-piece design made from polished stainless steel. Two-piece shoes that can disassemble when kicked are unacceptable.

1) Stainless Steel Hardware Upcharge Option:
- All pilaster, panel and screen brackets are stamped Stainless Steel, #4 brushed finish.
- All door wrap around hinge brackets are cast Stainless Steel, #4 brushed finish.
- All 14 x 1-3/4" & 14 x 5/8" TR-27 6-lobe security screws are stainless steel, #4 brushed finish.
- All pilaster shoes are stainless steel, #4 brushed finish.
- All inner, barrier free inner, outer, door pulls, stop and keepers, coat hooks and door castings are standard zinc die castings, #4 brushed finish.
- All other components not outlined here are standard Hadrian hardware items.

2) #4 Brushed Aluminum Upcharge Option:
- Extruded aluminum headrail, alcove channels, continuous "no sightline" stop and hinge filler available in #4 brushed finish as an option.

1.08 Finish

Type 304, #4 brushed finish.

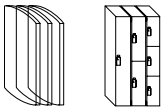

Hadrian Manufacturing Inc., 965 Syscon Road, Burlington, ON, Canada, L7L 5S3 • Tel: (905) 333-0300 • Fax: (905) 333-1841
Hadrian Inc., 7420 Clover Avenue, Mentor, OH, U.S.A., 44060 • Tel: (440) 942-9118 • Fax: (440) 942-9618
www.hadrian-inc.com

hadrian®

Stainless Steel - Headrail Braced
ELITE PLUS SERIES
Metal Toilet Partitions

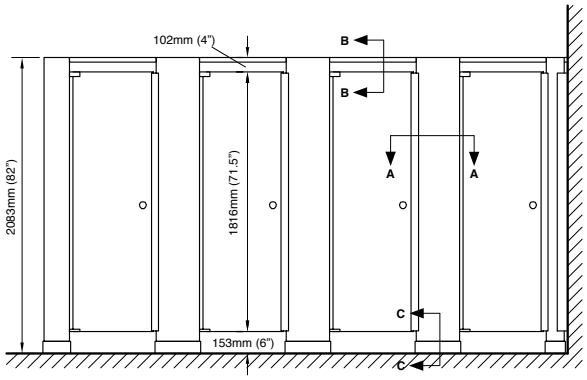

front elevation

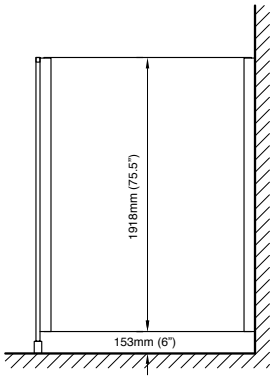

side elevation

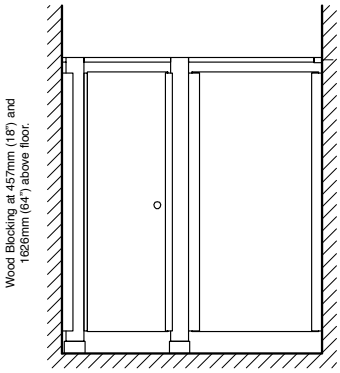

alcove elevation

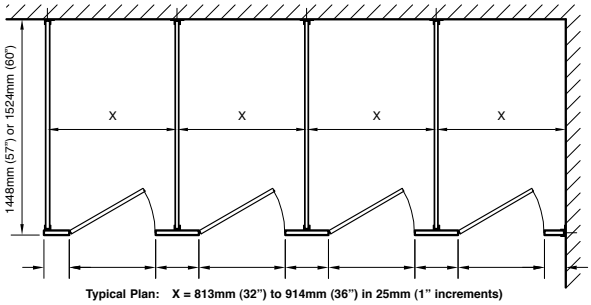

plan

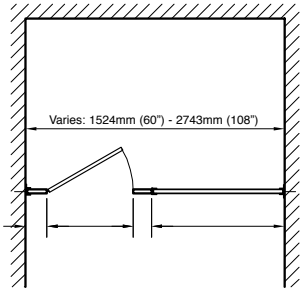

alcove plan

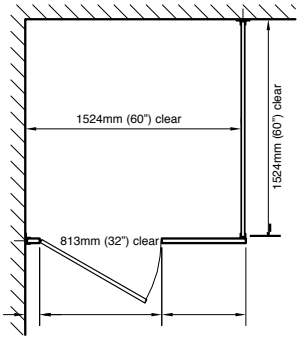

barrier-free plan

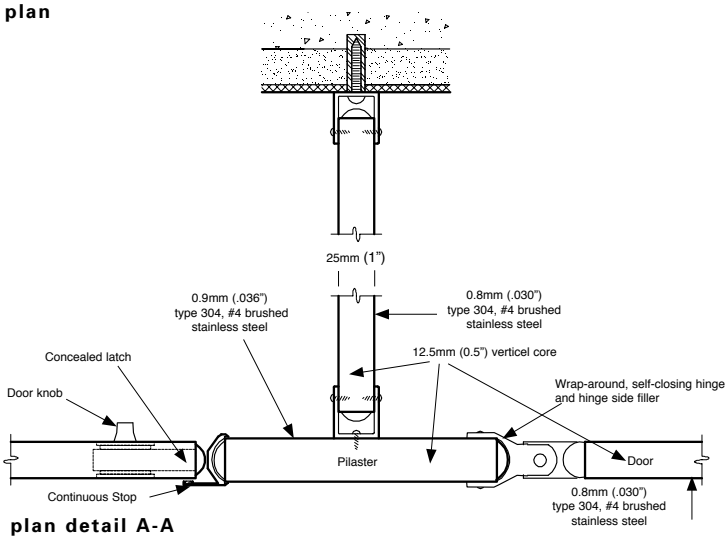

plan detail A-A

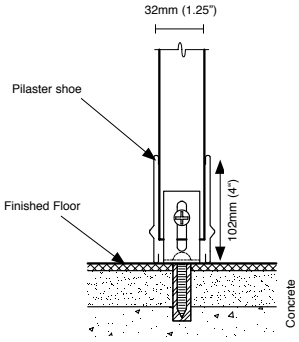

section detail C-C

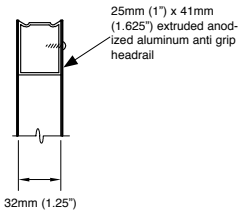

section B-B

Important Note:
Refer to final drawings for wood blocking information. Wood blocking is critical to ensure a rigid installation.

Hadrian Manufacturing Inc., 965 Syscon Road, Burlington, ON, Canada, L7L 5S3 • Tel: (905) 333-0300 • Fax: (905) 333-1841

Hadrian Inc., 7420 Clover Avenue, Mentor, OH, U.S.A., 44060 • Tel: (440) 942-9118 • Fax: (440) 942-9618

www.hadrian-inc.com

6/2008